Dept	Qty
DC	1
ED	1
IE	1
ISO	1
PD	1
R&D	1
SD	1
QA	1
QC	1
QE	1

The information provided herein is from CONNFLY Electronic Co., Ltd. and is confidential. Any disclosure to a party other than the recipient is prohibited. The intellectual properties and its rights contained herein, including but not limited to, trademarks, patents, copyrights, trade secrets, and technical know-how, are owned exclusively by CONNFLY or its affiliates. Unauthorized use or modification is strictly prohibited without prior written consent from CONNFLY. All intellectual properties provided herein are for reference purposes only and does not constitute authorization of its use in any format or manner. CONNFLY may enforce its intellectual property rights at its own discretion; failures or delays to exercise such rights does not constitute a waiver of such rights.

REV.	DESCRIPTION	DRAWN	CHECKED	APPROVED
A	NEW RELEASE	JLZ 10/11/16'		LJC 10/11/16'
B	DRAWING UPDATE	JLZ 06/13/20'		

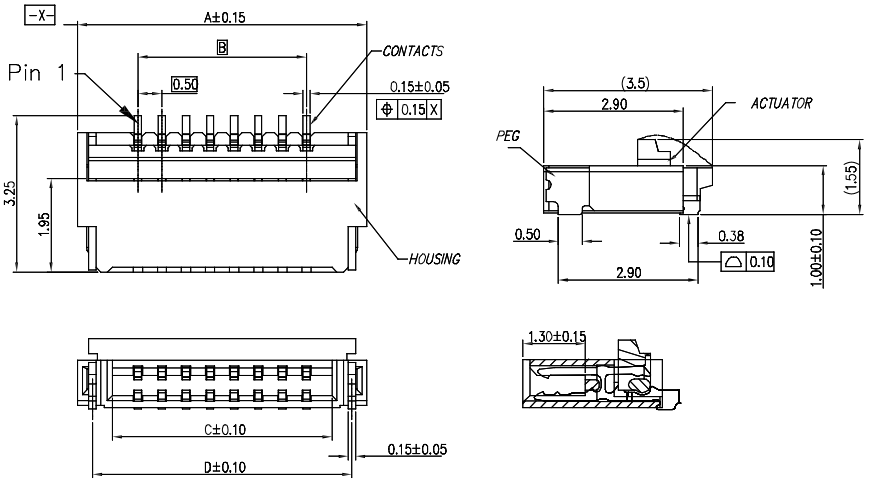

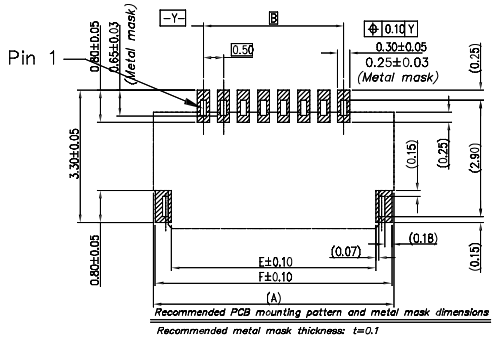

Recommended PCB mounting pattern and metal mask dimensions

Recommended metal mask thickness: t=0.1

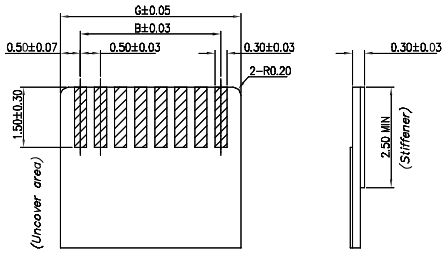

Recommended FPC/FFC Dimensions

50	27.00	24.50	25.57	26.39	26.10	26.90	25.50
45	24.50	22.00	23.07	23.89	23.60	24.40	23.00
40	22.00	19.50	20.57	21.39	21.10	21.90	20.50
34	19.00	16.50	17.57	18.39	18.10	18.90	17.50
32	18.00	15.50	16.57	17.39	17.10	17.90	16.50
30	17.00	14.50	15.57	16.39	16.10	16.90	15.50
26	15.00	12.50	13.57	14.39	14.10	14.90	13.50
24	14.00	11.50	12.57	13.39	13.10	13.90	12.50
23	13.50	11.00	12.07	12.89	12.60	13.40	12.00
22	13.00	10.50	11.57	12.39	12.10	12.90	11.50
20	12.00	9.50	10.57	11.39	11.10	11.90	10.50
16	10.00	7.50	8.57	9.39	9.10	9.90	8.50
14	9.00	6.50	7.57	8.39	8.10	8.90	7.50
12	8.00	5.50	6.57	7.39	7.10	7.90	6.50
11	7.50	5.00	6.07	6.89	6.60	7.40	6.00
10	7.00	4.50	5.57	6.39	6.10	6.90	5.50
8	6.00	3.50	4.57	5.39	5.10	5.90	4.50
7	5.50	3.00	4.07	4.89	4.60	5.40	4.00
6	5.00	2.50	3.57	4.39	4.10	4.90	3.50
4	4.00	1.50	2.57	3.39	3.10	3.90	2.50
Contacts	DIM A	DIM B	DIM C	DIM D	DIM E	DIM F	DIM G

NOTES:

1. Materials
   - 1.1 Insulator:Thermoplastic(UL 94V-0).
   - 1.2 Contact: Copper alloy.
2. Specification
   - 2.1 Temperature:-25°C ~ +85°C.
   - 2.2 Contact resistance:30mΩ max.
   - 2.3 Insulation resistance:100MΩ min.
   - 2.4 Dielectric withstanding voltage:AC 100V per minute.
3. Product number code:

DS1020-19- X X X X X

- Packing type
  R: Tape on reeL
- Contact plating
  6: Tin
  8: Gold flash
- Cover color
  B: Black
- Housing color
  V: Ivory
- No. of contacts
  04~50

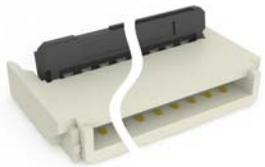

(Series Image-Reference Only)

GENERAL TOLERANCE		ANGLE TOLERANCE	
X.	±0.60	X.	±5°
.X	±0.38	.X	±3°
.XX	±0.25	.XX	±2°

DRAWING TYPE	CUSTOMER		
SCALE	1:1	SHEET	1 OF 1
DRAWING NO.	C-DS1020-19-XXXXX-B		

PROJECTION		TITLE	0.5mm FPC ZIF R/A SMT TYPE L=3.25mm
UNITS	mm		
SHEET SIZE	A4	SERIES	DS1020-19 SERIES

晨翔电子有限公司

CONNFLY CONNFLY ELECTRONIC CO. LTD